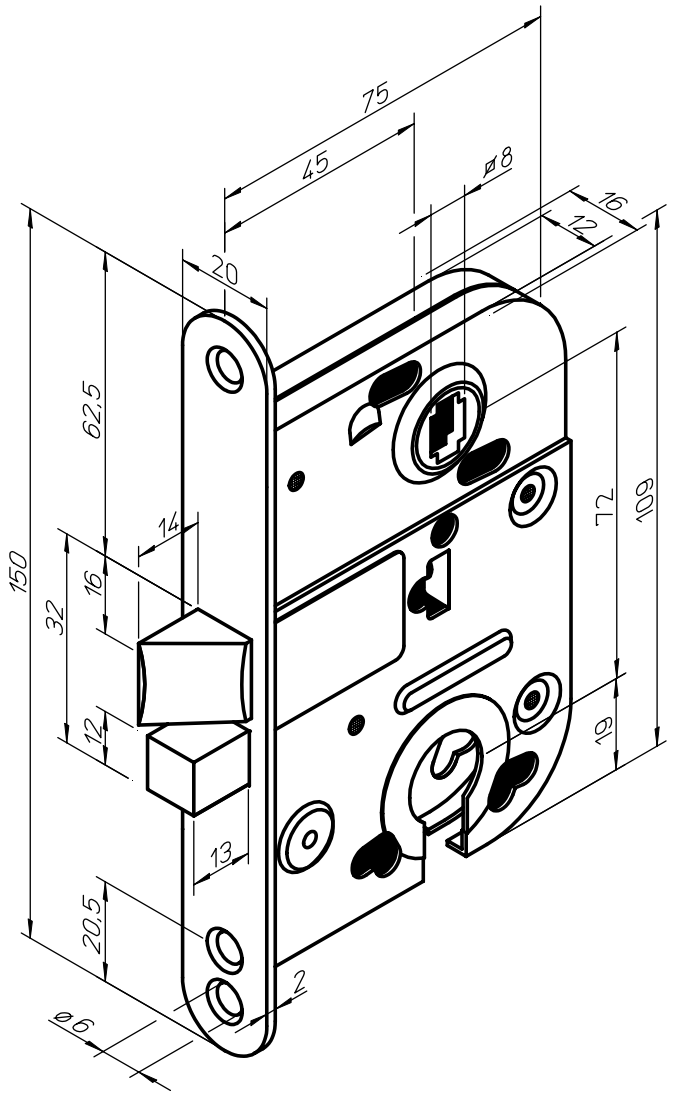

Lukko 2018

900013